TRIME®
Lighting Towers

LED TECHNOLOGY

4700 sqm

Illuminated area

PLUG-IN Line

- Rail mantenance
- Road maintenance
- Security
- Outdoor show
- Special events
- Military applications
- Emergency



Operation: **POWER**
Inlet plug 16A - 230V
Outlet socket 16A - 230V

X-MAST

4x160W LED - 8,5m

T-ZERO PRO

X-MAST

4X160W LED - 8,5M

T-ZERO PRO

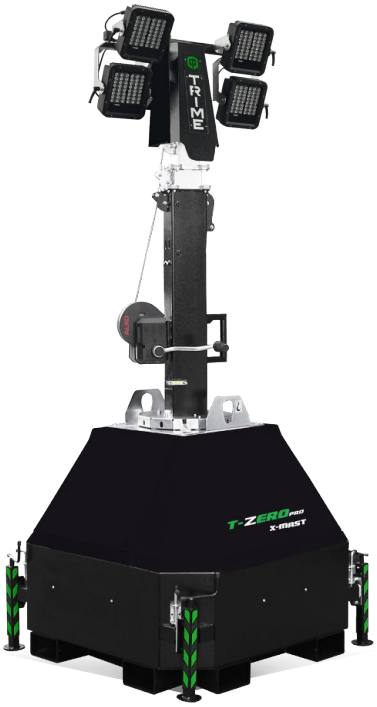

max height 8,5 m

Kg 430

rotation 340°

POWER

FEATURES

- Multi-directionally adjustable and tiltable floodlights
- 8,5 meters vertical tower, 340° rotatable
- **Manual lifting system by winch complete with auto-braking system**
- Galvanized metalworks
- 80 µm powder coating
- **Very compact dimensions, up to 22 units per truck**
- Sides lifting eyes
- Sites forklift pockets
- Guided main coiled cable to avoid damage during tower operation
- Circuit breaker for electrical protection against overload
- Certified wind stability up tp 110 km/h
- 4 extendable & height adjustable stabilizers
- Inlet plug and outlet socket to connect in series more units

ZERO emissions

ZERO fuel costs

ZERO noise

MINIMAL sevice

EASY handling & transportability

LINKABLE TOWERS

4700 sqm illuminated area

Complete SILENCE on work time 8 HOURS A DAY 7 DAYS A WEEK 8h/7days

22 units per truck VERY COMPACT dimensions

Dimensions & weight	**Dimensions min (mm)**		**Dimensions max(mm)**		**Total weight (kg)**
	1100x1100x2650 (LxWxH)		2360x2360x8500 (LxWxH)		430
Floodlights	**Type**	**Power (each)**	**Floodlights number**	**IP level**	**Illuminated area (sqm)**
	Led	160W	4	65	4700
Mast	**Lifting method**	**Max Height**	**Max Wind Speed**		**Rotation**
	Manual	8,5 m	110 km/h		340°
Input&output	**Inlet plug**				**Outlet socket**
	16A - 230V				16A - 230V

TRIME®
Lighting Towers
Sales Dept. +39 0382 406 252
www.trime.it - info@trime.it

The company reserves the right to modify the technical specifications, items and design without notice. The images of the products are indicative for illustrative purposes only.